SSBP/SSDL

Materials

Stationary - Cer, Sic, SSic, TC

Elastomer - NBR, EPDM, Viton, PTFE

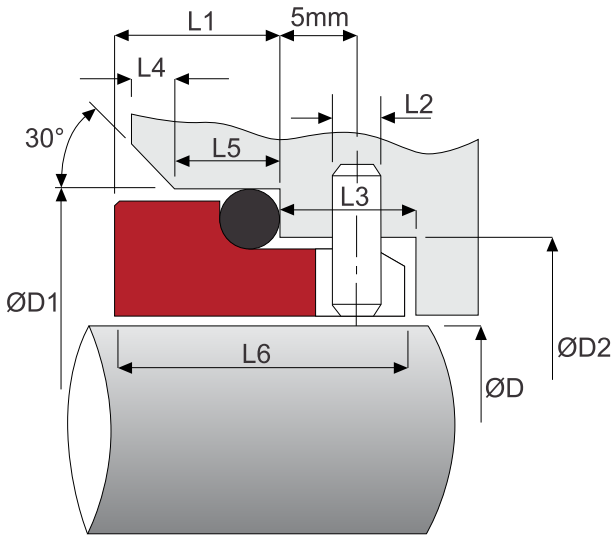

Metric		ØD1	ØD2	L3	L4	L5	SSBP			SSDL		
Code	Shaft ØD						L1	L2	L6	L1	L2	L6
0100	10	21	-	8.5	1.2	4	-	-	-	8.6	4.0	15.0
0120	12	23	-	8.5	1.2	4	-	-	-	8.6	5.0	15.0
0140	14	25	21	9.0	1.5	5	12.0	2.5	18.5	8.6	5.0	15.0
0160	16	27	23	9.0	1.5	5	12.0	2.5	18.5	8.6	5.0	15.0
0180	18	33	27	9.0	1.5	5	13.5	3.0	20.5	10.0	5.5	17.0
0200	20	35	29	9.0	1.5	5	13.5	3.0	20.5	10.0	5.5	17.0
0220	22	37	31	9.0	1.5	5	13.5	3.0	20.5	10.0	5.5	17.0
0240	24	39	33	9.0	1.5	5	13.3	3.0	20.3	10.0	5.5	17.0
0250	25	40	34	9.0	1.5	5	13.0	3.0	20.0	10.0	5.5	17.0
0280	28	43	37	9.0	1.5	5	12.5	3.0	19.5	10.0	5.5	17.0
0300	30	45	39	9.0	1.5	5	12.0	3.0	19.0	10.0	5.5	17.0
0320	32	48	42	9.0	1.5	5	12.0	3.0	19.0	10.0	5.5	17.0
0330	33	48	42	9.0	1.5	5	12.0	3.0	19.0	10.0	5.5	17.0
0350	35	50	44	9.0	1.5	5	12.0	3.0	19.0	10.0	5.5	17.0
0380	38	56	49	9.0	1.5	6	13.0	4.0	20.0	11.0	5.5	18.0
0400	40	58	51	9.0	1.5	6	13.0	4.0	20.0	11.0	5.5	18.0
0430	43	61	54	9.0	1.5	6	13.0	4.0	20.0	11.0	5.5	18.0
0450	45	63	56	9.0	2.0	6	13.0	4.0	20.0	11.0	5.5	18.0
0480	48	66	59	9.0	2.0	6	13.0	4.0	20.0	11.0	5.5	18.0
0500	50	70	62	9.0	2.0	6	13.5	4.0	20.5	13.0	5.5	20.0
0530	53	73	65	9.0	2.0	6	13.5	4.0	20.5	13.0	5.5	20.0
0550	55	75	67	9.0	2.0	6	13.5	4.0	20.5	13.0	5.5	20.0
0580	58	78	70	9.0	2.0	6	13.5	4.0	20.5	13.0	5.5	20.0
0600	60	80	72	9.0	2.0	6	13.5	4.0	20.5	13.0	5.5	20.0
0630	63	83	75	9.0	2.0	6	13.5	4.0	20.5	13.0	5.5	20.0
0650	65	85	77	9.0	2.0	6	13.5	4.0	20.5	13.0	5.5	20.0
0680	68	90	81	9.0	2.0	7	13.5	4.0	20.5	15.3	5.5	22.0
0700	70	92	83	9.0	2.0	7	14.5	4.0	21.5	15.3	5.5	22.0
0750	75	97	88	9.0	2.0	7	14.5	4.0	21.5	15.3	5.5	22.0
0800	80	105	95	9.0	2.0	7	15.0	4.0	22.0	15.7	5.5	23.0
0850	85	110	100	9.0	2.0	7	15.0	4.0	22.0	15.7	5.5	23.0
0900	90	115	105	9.0	2.0	7	15.0	4.0	22.0	15.7	5.5	23.0
0950	95	120	110	9.0	2.0	7	15.0	4.0	22.0	15.7	5.5	23.0
1000	100	125	115	9.0	2.0	7	15.0	4.0	22.0	15.7	5.5	23.0